Findeva®
www.findeva.com

Quality in vibrators

Pneumatic vibrators for industries

Detailed Technical data: www.findeva.com

- Conveying
- Filling
- Compacting
- Separating

PIVAC
vakuumspecialisten
PIVAC AB
Propellervägen 12
183 62 TÄBY
08 544 409 00
info@pivac.se
www.pivac.se

Quality and innovation

With more than 40 years of experience, Findeva provides her clients with the very best vibrators in over 60 countries worldwide. A range of more than 70 models allows to find the best solution in every case.

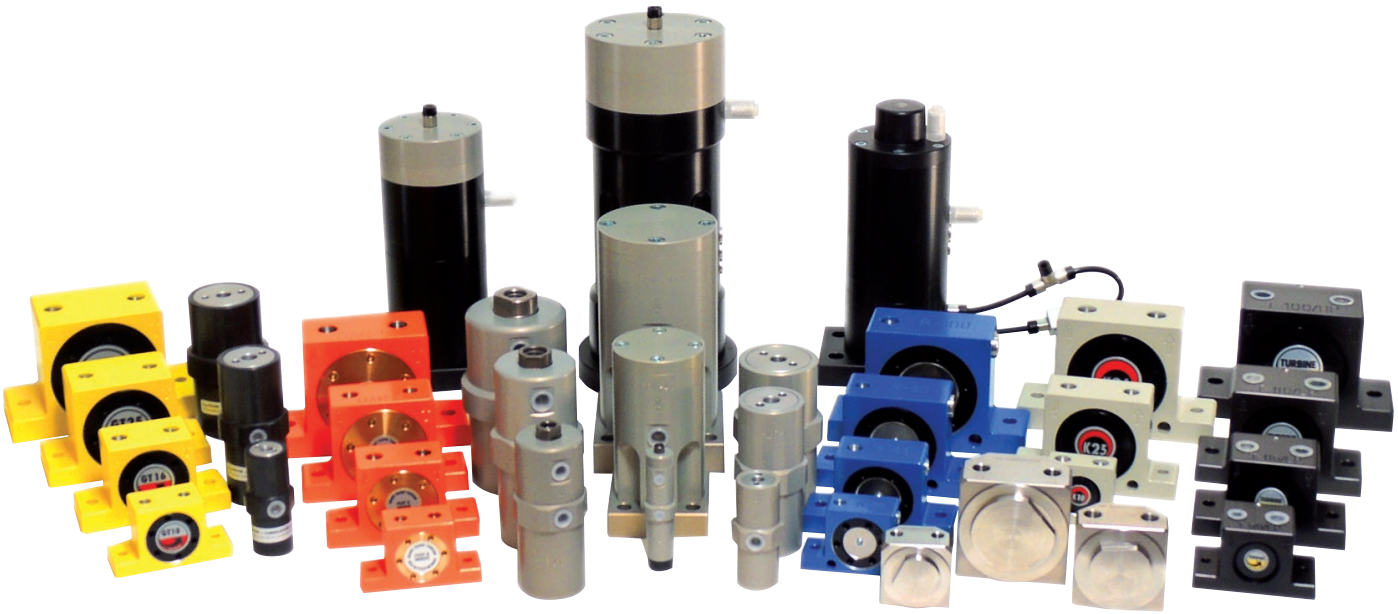

Advantages of Findeva vibrators and knockers:

- Excellent power to weight ratio
- High-quality aluminium housings, intricate surface tooling: corrosion-resistant and easy to clean
- Low air consumption, frequency/pulse controllable by air pressure
- Sturdy and simple construction for long life and low maintenance costs
- Wide range covering over 70 models
- High availability of stock and fast delivery
- No risk of explosion
- All models available with ATEX certification

Technical data:

Technical data were measured unless otherwise stated, using a Kistler 3-axis dynamometer. Trials were carried out on a massive laboratory test block and displayed by means of a Kistler Control Monitor (COMO). Frequency and power decrease when less rigid bases are used. We reserve the right to improve, modify or withdraw specifications or products without prior notice or obligation.

Detailed technical data: www.findeva.com

Contents:

	Page
Advantages of Findeva	2
Ball vibrators	
Series K	4
Roller vibrators	
Series R	5
Series DAR	6
Turbine vibrators	
Series T	7
Series GT (lubrication-free)	8
Series GTRF (lubrication-free, stainless steel)	9
Linear vibrators	
Series FP	10
Series FPLF (lubrication-free)	11
Series FAL (lubrication-free) and VTL	12
Knockers	
High-frequency Knocker FPK	13
Series ‹FKL in› and ‹FKL si›	14
Series ‹FKL mi›	15
Evaluation / bandwidths	
Bandwidths and frequencies of the forces	16 - 17
Vacuum clamps	
Series VTC	18
Evaluation of the right vibrator	19

Ball Vibrators K

Ball vibrators, simple and good.
Wide range for many applications.

Properties

- Powerful
- Rated frequency 7'300 – 35'000 rpm
- Centrifugal force 130 – 4'050 N
- Continuously variable
- Can be used up to 100 °C
- HT version up to 150 °C on request

Field of application

- Emptying of bunkers
- Screen filters
- Vibrating tables
- Preventing adhesions in pipelines and silos
- Moving of goods

Construction

- Vibration by means of a ball that is guided by hardened steel guides.
- Nylon plates on both sides to support the ball and as protection from dust and water.
- Housing with 4 mounting bores, depending on the application.

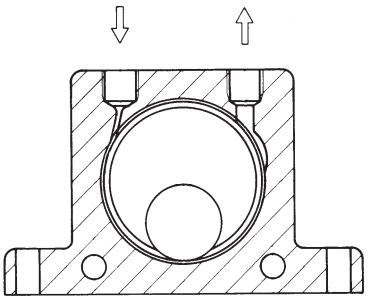

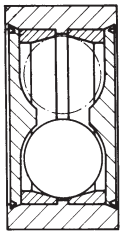

Housing made from extruded aluminium alloy
Hardened guides made of steel
Nylon end plates
Hardened ball

Technical data (in detail and with PSI, LBS, CF: www.findeva.com)

Model	Vibrations 1000 rpm 2 bars	Vibrations 1000 rpm 6 bars	Centrifugal force N 2 bars	Centrifugal force N 6 bars	Air consumption l/min 2 bars	Air consumption l/min 6 bars
K-8	25.5	35	130	360	83	195
K-10	22.5	34	250	710	92	200
K-13	15	22.5	320	870	94	225
K-16	13	19.5	450	1100	122	280
K-20	10.5	16.5	720	1720	130	340
K-25	9.2	14	930	2050	160	425
K-30	7.8	12.5	1510	3210	215	570
K-36	7.3	10	2060	4050	260	675

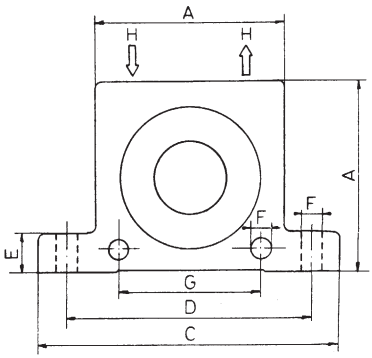

Sizes and weights in mm and g (more details and including inches at www.findeva.com)

Model	A	Width	C	D	E	F	G	H Thread BSP	Weight g
K-8	50	20	86	68	12	7	40	1/4"	130
K-10	50	20	86	68	12	7	40	1/4"	130
K-13	65	24	113	90	16	9	50	1/4"	260
K-16	65	27	113	90	16	9	50	1/4"	300
K-20	80	33	128	104	16	9	60	1/4"	530
K-25	80	38	128	104	16	9	60	1/4"	630
K-30	100	44	160	130	20	11	80	3/8"	1130
K-36	100	50	160	130	20	11	80	3/8"	1340

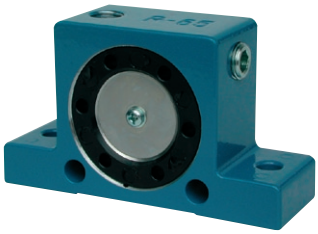

Roller Vibrators R

Simply constructed high-frequency roller vibrators, wide range for many applications.

Properties

- High torque
- Rated frequency 10’000 – 36'000 rpm
- Centrifugal force 1’070 – 12’500 N
- Continuously variable
- Can be used up to 150 °C
- Resistant to extreme environmental conditions

Field of application

- Emptying of hoppers and chutes
- Screen filters
- Conveying of particulates
- Preventing adhesions in pipelines and silos
- Transporting of fine powders
- Compacting of plastic and concrete in troughs

Construction

- Vibration created by a rotating precision-steel roller
- Shockproof plastic end plates
- Housing with 4 mounting bores, depending on the application

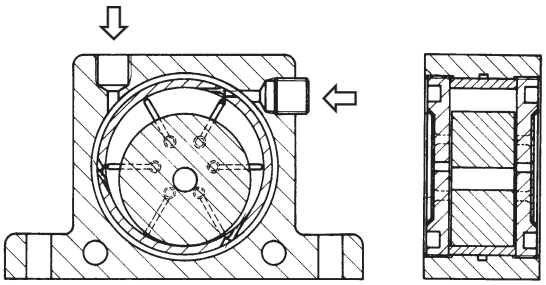

Housing made from extruded aluminium alloy
Cast iron strip
Steel roller
Plastic end plates

Technical data (in detail and with PSI, LBS, CF: www.findeva.com)

Model	Vibrations 1000 rpm 2 bars	Vibrations 1000 rpm 6 bars	Centrifugal force N 2 bars	Centrifugal force N 6 bars	Air consumption l/min 2 bars	Air consumption l/min 6 bars
R-50	25.0	36.0	1070	4220	100	195
R-65	19.0	26.0	2730	6120	200	400
R-80	15.5	19.0	3000	7450	290	570
R-100	11.0	16.0	3750	8900	370	730
R-120	10.0	12.5	8000	12500	500	970

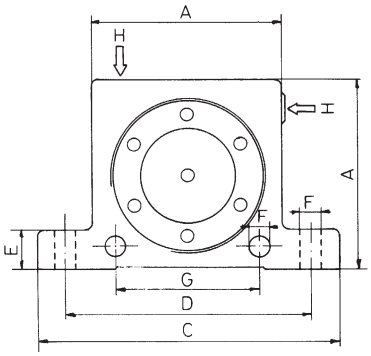

Sizes and weights in mm and g (more details and including inches at www.findeva.com)

Model	A	Width	C	D	E	F	G	H Thread BSP	Weight g
R-50	50	29	86	68	12	7	40	1/8”	240
R-65	65	37	113	90	16	9	50	1/4”	545
R-80	80	43	128	104	16	9	60	1/4”	950
R-100	100	52	160	130	20	11	80	3/8”	1810
R-120	120	77	194	152	24	17	-	3/8”	4260

Roller Vibrators DAR

Roller vibrators, especially for concrete and other heavy-duty applications. Wide range.

Properties

- High torque
- Rated frequency 7’800 – 38'000 rpm
- Centrifugal force 1’680 – 12’000 N
- Continuously variable
- Can be used up to 150 °C
- Resistant to extreme environmental conditions

Field of application

- Compacting of plastic and concrete
- Assisting the flow of material in silos and hoppers
- Separating of different sized products on sieves

Construction

- Vibration through rotating precision rollers in highly flexible steel guides
- Reinforced by two extra-shockproof bronze end plates

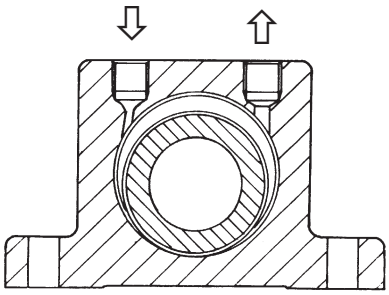

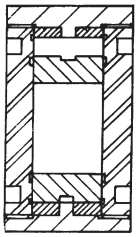

Housing made from extruded aluminium alloy
Highly flexible steel guides
Cast precision steel roller
Special bronze end plates

Technical data (in detail and with PSI, LBS, CF: www.findeva.com)

Model	Vibrations 1000 rpm 2 bars	Vibrations 1000 rpm 6 bars	Centrifugal force N 2 bars	Centrifugal force N 6 bars	Air consumption l/min 2 bars	Air consumption l/min 6 bars
DAR-2	36	38	2200	4090	70	200
DAR-3	27	32	2720	6050	100	300
DAR-4	18	25	2360	6690	120	360
DAR-5	9.5	16.5	1680	7200	130	390
DAR-6	7.8	12	4370	10300	170	470
DAR-7	8	11.5	5870	12000	180	500

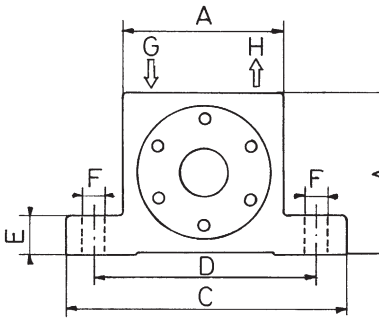

Sizes and weights in mm and g (more details and including inches at www.findeva.com)

Model	A	Width	C	D	E	F	G/H Thread BSP	Weight g
DAR-2	50	30	86	68	12	7	1/8”	370
DAR-3	65	36	113	90	16	9	1/4”	760
DAR-4	80	40	128	102	16	11	1/4”	1270
DAR-5	100	52	160	130	20	13	3/8”	2450
DAR-6	120	62	194	152	24	17	3/8”	4700
DAR-7	120	77	194	152	24	17	3/8”	5700

Turbine Vibrators T

High speed and high working torque for strong vibration at large amplitude. Wide range.

Properties

- Rated frequency 6’500 – 23'000 rpm
- Centrifugal force 600 – 6’060 N
- Continuously variable
- Can be used up to 100 °C
- Resistant to extreme environmental conditions

Field of application

- Emptying of bunkers
- Screen filters
- Vibrating tables
- Preventing adhesions in pipelines and silos
- Transporting of fine powders
- Moving of bulk materials

Construction

- Vibration with a high eccentric torque, caused by the rotor’s imbalance
- Low noise level

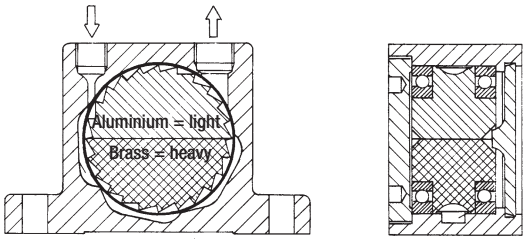

Housing made from extruded aluminium alloy with hard anodization
Ball bearing
Plastic end cap with screw thread
Nylon end cap

Technical data (in detail and with PSI, LBS, CF: www.findeva.com)

Model	Vibrations 1000 rpm 2 bars	Vibrations 1000 rpm 6 bars	Centrifugal force N 2 bars	Centrifugal force N 6 bars	Air consumption l/min 2 bars	Air consumption l/min 6 bars
T-50 / LP	17	23	700	1710	67	165
T-50 / HP	11	16.5	600	1350	79	198
T-65 / LP	9.5	15	770	1800	89	236
T-65 / HP	8.5	12	1300	2600	108	290
T-80 / LP	9	13	1840	3790	150	385
T-80 / HP	6.8	10.5	2000	4740	-	385
T-100 / HP	6.5	10	2480	6060	-	430

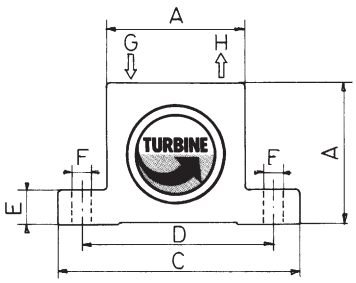

Sizes and weights in mm and g (more details and including inches at www.findeva.com)

Model	A	Width	C	D	E	F	G* Thread BSP	H Thread BSP	Weight g
T-50 / LP	50	46	86	68	12	7	1/8”	1/4”	385
T-50 / HP	50	60	86	68	12	7	1/8”	1/4”	520
T-65 / LP	65	50	113	90	16	9	1/4”	1/4”	735
T-65 / HP	65	64	113	90	16	9	1/4”	1/4”	975
T-80 / LP	80	56	128	104	16	11	1/4”	3/8”	1210
T-80 / HP	80	70	128	104	16	11	1/4”	3/8”	1560
T-100 / HP	100	67	160	130	20	13	3/8”	3/8”	2270

Golden Turbine® GT

High speed and eccentric working torques for strong vibration. Wide range.

Properties

- Lubrication-free
- Low noise level
- Strong vibration by means of high speed and eccentric working torques
- Rated frequency 6'000 – 46'000 rpm
- Centrifugal force 130 – 12'000 N
- Continuously variable
- Can be used up to 150 °C
- Resistant to extreme environmental conditions

Field of application

- Emptying of bunkers
- Screen filters
- Vibrating tables
- Preventing adhesions in pipelines and silos
- Transporting of fine powders
- Moving of bulk materials

Construction

- Vibration from the centrifugal force of positive and negative imbalanced torques in the rotor.
- Rotor on two pre-lubricated and enclosed ball bearings arranged in pairs. Lubricated with special grease for long life.

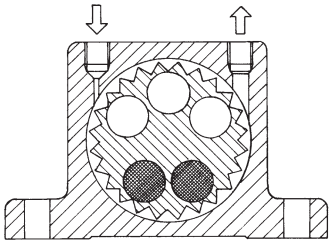

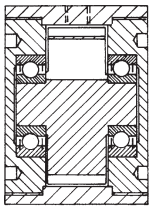

Housing made from extruded aluminium alloy
Turbine wheel made from surface-hardened aluminium
Surface-hardened aluminium end plates

Technical data (in detail and with PSI, LBS, CF: www.findeva.com)

Model	Vibrations 1000 rpm 2 bars	Vibrations 1000 rpm 6 bars	Centrifugal force N 2 bars	Centrifugal force N 6 bars	Air consumption l/min 2 bars	Air consumption l/min 6 bars
GT-4	14	15	135	200	33	83
GT-6	11,5	12,5	130	210	33	83
GT-8	36	46	990	2910		
GT-10	27,5	37,5	840	2400	46	112
GT-10-S	17	25	650	1950		
GT-13	26	33	1400	3730		
GT-16	17	24	1220	3160	120	290
GT16-S	11,5	17	1100	2700		
GT-20	17	23	2170	5520		
GT-25	12	17	2120	5070	185	455
GT-25-S	8,5	13	2250	4900		
GT-30	13	16	3380	7540		
GT-36	8	13	3290	7190	330	745
GT-36-S	6,1	8,3	4100	7500		
GT-40	7,7	9,5	4300	9800		
GT-48	6	9,7	4900	10500	425	970
GT-48-S	-	6,3	-	12000		

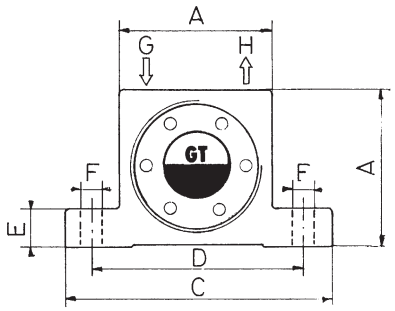

Sizes and weights in mm and g (more details and including inches at www.findeva.com)

Model	A	Width	C	D	E	F	G/H	Weight
GT-4 / 6	40	28	70	56	10,5	6	1/8"	170
GT-8 / 10	50	33	86	68	12	7	1/8"	255
GT-13 / 16	65	42	113	90	16	9	1/4"	580
GT-20 / 25	80	56	128	104	16	9	1/4"	1120
GT-30 / 36	100	73	160	130	20	11	3/8"	2300
GT-40 / 48	120	83	194	152	24	17	3/8"	3890

Stainless Turbines GTRF

Pneumatic turbine vibrators made of stainless-steel.

Properties

- Lubrication-free
- Low noise level
- Strong vibration by means of high speed and eccentric working torques
- Rated frequency 14’000 – 37’000 rpm
- Centrifugal force 750 – 5’700 N
- Continuously variable
- Can be used up to 150 °C
- Resistant to extreme environmental conditions

Field of application

- For foodstuffs and pharmaceuticals, complies with FDA specifications
- Emptying of bunkers
- Screen filter
- Vibrating tables
- Preventing adhesions in pipelines and silos
- Transporting of fine powders
- Moving of bulk materials

Construction

- Vibration from the centrifugal force of positive and negative imbalanced torques in the rotor.
- Rotor on two pre-lubricated and enclosed ball bearings arranged in pairs.
- Made from stainless-steel 316 and lubricated with special grease for long life.

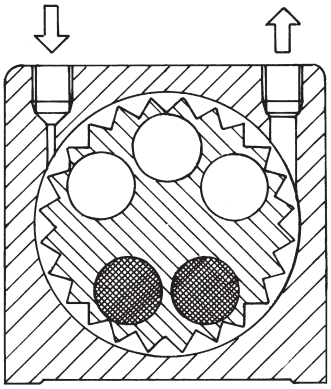

Housing made of stainless-steel
Turbine wheel made of surface-hardened aluminium

Technical data (in detail and with PSI, LBS, CF: www.findeva.com)

Model	Vibrations 1000 rpm		Centrifugal force N		Air consumption l/min	
	2 bars	6 bars	2 bars	6 bars	2 bars	6 bars
GT-10-RF	27.0	37.0	750	2100	46	112
GT-16-RF	20.0	27.5	1700	3700	120	290
GT-25-RF	14.0	19.5	2500	5700	185	455

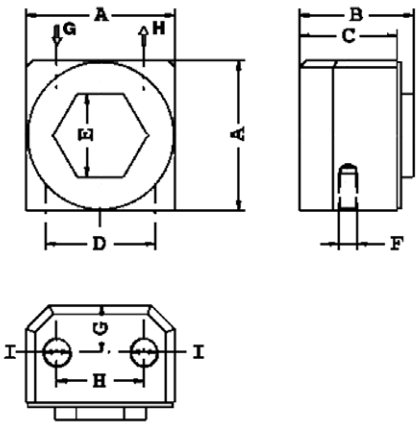

Sizes and weights in mm and g (more details and including inches at www.findeva.com)

Model	A	Width	C	D	E	F	G / H	Weight
GT-10-RF	49	38	32	36	27	M 6	1/8”	525
GT-16-RF	64	45	39	48	36	M 8	1/4”	1002
GT-25-RF	78	55	49	60	50	M 10	1/4”	1807

Piston-Vibrators FP

Pneumatic piston vibrators for linear vibration with unlimited fine-tuning facilities for amplitude and frequency. Wide range.

Properties

- Quiet and efficient
- Rated frequency 1’800 – 9'300 vpm
- Force 32 – 6’150 N
- Continuously variable
- Can be used up to 150 °C
- Resistant to extreme environmental conditions

Field of application

- Driving conveyor and discharge chutes
- Loosening or compacting of bulk materials
- Starting up of mechanical processes
- Filling facilities

Construction

Aluminium housing surface-hardened and corrosion-resistant

Technical data (in detail and with PSI, LBS, CF: www.findeva.com)

Model	Vibrations 1000 vpm 2 bar	6 bar	Force N 2 bar	6 bar	air consumption l/min 2 bar	6 bar	A Length mm	C SW mm	D Thread	E Inlet	F Outlet	Weight g
FP-12-S	6,2	9,3	34	92	0,8	25	71	34	M-8	1/8”	1/8”	153
FP-12-M	5	6,7	34	74	0,5	19	81	34	M-8	1/8”	1/8”	178
FP-12-L	4	5,4	32	81	1	20	94	34	M-8	1/8”	1/8”	212
FP-18-S	5	7,7	66	187	5	57	81	42	M-10	1/8”	1/8”	300
FP-18-M	4	5,9	68	188	4	52	94	42	M-10	1/8”	1/8”	352
FP-18-L	3,1	4,6	64	206	5	46	109	42	M-10	1/8”	1/8”	423
FP-25-S	3,6	5,5	126	416	13	93	98	50	M-12	1/8”	1/4”	553
FP-25-M	3	4,2	142	504	23	87	116	50	M-12	1/8”	1/4”	672
FP-25-L	2,4	3,7	186	594	18	93	136	50	M-12	1/8”	1/4”	820
FP-35-S	3,8	5,8	294	1038	23	162	98	65	M-12	1/4”	1/4”	926
FP-35-M	3	4,6	248	1080	24	141	116	65	M-12	1/4”	1/4”	1135
FP-35-L	2,4	3,6	282	1066	38	135	136	65	M-12	1/4”	1/4”	1382
FP-50-M	1,85	2,8	490	1660	48	192	L 154	A 90	C 8,8	F 1/4"	F_1 1/4"	3300
FP-60-M	1,95	2,7	610	2170	90	275	L 154	A 110	C 8,8	F 1/4"	F_1 3/8"	4250
FP-95-M	1,8	2,8	1620	6150	170	490	L 156	A 150	C 13,0	F 3/8"	F_1 3/8"	9460

Housing made from hard-anodized aluminium alloy
Piston made from leaded-bronze
Steel spring starting device
Hard anodized aluminium end cap

FP-50 – 95

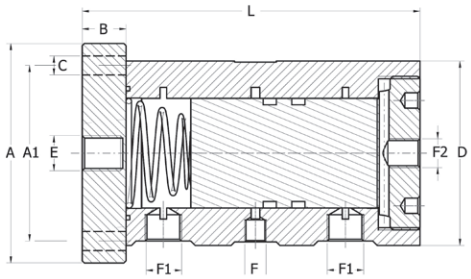

FP-12 – 35

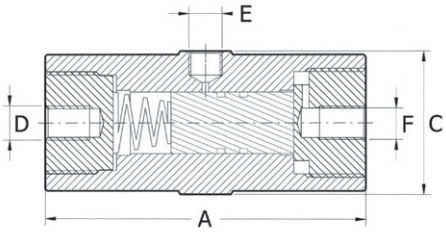

Piston-Vibrators FPLF

Lubrication-free pneumatic vibrators for linear vibration with unlimited fine-tuning facilities for amplitude and frequency. Wide range.

Properties

- Quiet and efficient
- Rated frequency 1'800 – 9'300 vpm
- Force 32 – 6'150 N
- Continuously variable
- Can be used up to 85 °C
- Resistant to extreme environmental conditions

Field of application

- For foodstuffs and pharmaceuticals, complies with FDA specifications
- Driving conveyor and discharge chutes
- Loosening or compacting of bulk materials
- Starting up of mechanical processes
- Filling facilities

Construction

- Lubrication-free operation possible.
- Extra hard and corrosion-resistant surface through aluminium oxide-generated by titaniferous electrolyte.
- Ideally suited for foodstuffs, drinks and pharmaceuticals.

Technical data (in detail and with PSI, LBS, CF: www.findeva.com)

Model	Vibrations 1000 vpm 2 bar	Vibrations 1000 vpm 6 bar	Force N 2 bar	Force N 6 bar	air consumption l/min 2 bar	air consumption l/min 6 bar	A Length mm	C SW mm	D Thread	E Inlet	F Outlet	Weight g
FPLF-12-XS	6	11,5	22	68	0,8	15	50	37	M-8	1/8"	1/8"	105
FPLF-12-S	6,2	9,3	34	92	0,8	25	71	34	M-8	1/8"	1/8"	150
FPLF-12-M	5	6,7	34	74	0,5	19	81	34	M-8	1/8"	1/8"	174
FPLF-12-L	4	5,4	32	81	1	20	94	34	M-8	1/8"	1/8"	205
FPLF-18-S	5	7,7	66	187	5	57	81	42	M-10	1/8"	1/8"	289
FPLF-18-M	4	5,9	68	188	4	52	94	42	M-10	1/8"	1/8"	342
FPLF-18-L	3,1	4,6	64	206	5	46	109	42	M-10	1/8"	1/8"	405
FPLF-25-S	3,6	5,5	126	416	13	93	98	50	M-12	1/8"	1/4"	525
FPLF-25-M	3	4,2	142	504	23	87	116	50	M-12	1/8"	1/4"	640
FPLF-25-L	2,4	3,7	186	594	18	93	136	50	M-12	1/8"	1/4"	774
FPLF-35-S	3,8	5,8	294	1038	23	162	98	65	M-12	1/4"	1/4"	880
FPLF-35-M	3	4,6	248	1080	24	141	116	65	M-12	1/4"	1/4"	1065
FPLF-35-L	2,4	3,6	282	1066	38	135	136	65	M-12	1/4"	1/4"	1295
FPLF-50-M	1,85	2,8	490	1660	48	192	L 154	A 90	C 8,8	F 1/4"	F_1 1/4"	3050
FPLF-60-M	1,95	2,7	610	2170	90	275	L 154	A 110	C 8,8	F 1/4"	F_1 3/8"	4100
FPLF-95-M	1,8	2,8	1620	6150	170	490	L 156	A 150	C 13,0	F 3/8"	F_1 3/8"	9400

Drawing FPLF-50 – 95 see FP

Housing made from hard-anodized aluminium alloy
Piston made of steel
Steel spring starting device
Sound-absorbing air outlet system
Hard-anodised aluminium base
Threaded insert for mounting purposes

FPLF-12-XS

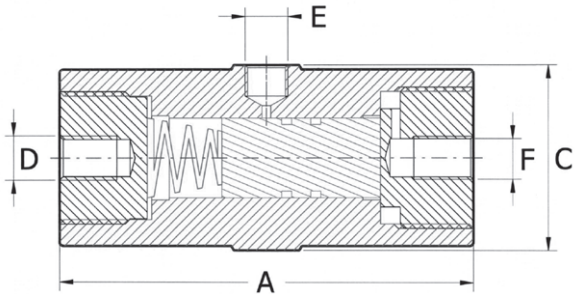

Piston-Vibrators FAL (lubrication-free) and VTL

Pneumatic piston vibrators for linear vibration with unlimited fine-tuning facilities for amplitude and frequency. Wide range.

Properties

- Quiet and efficient
- Rated frequency 1’130 – 3'400 vpm
- Force 12 – 2’740 N
- Continuously variable
- FAL can be used up to 85 °C, VTL-155 up to 100 °C, remaining VTLs up to 150 °C
- Resistant to extreme environmental conditions

Field of application

- For foodstuffs and pharmaceuticals, complies with FDA specifications (FAL only)
- Driving conveyor and discharge chutes
- Loosening or compacting of bulk materials
- Starting up of mechanical processes
- Filling facilities
- Accessory for FAL: Bellows for ATEX or dusty environment

Construction

- With a freely flying piston, the tapered end of which protrudes from the vibrator’s housing.
- Lubrication-free operation possible (FAL).
- Its optimum power to weight ratio makes its employment in producing conveying impulses particularly efficient.
- Extra hard and corrosion-resistant surface through aluminium oxide – generated by titaniferous electrolyte (FAL).

Steel housing: Series VTL 165, 255, 405, 555, 855.
Plastic housing: VTL 155.

Technical data (in detail and with PSI, LBS, CF: www.findeva.com)

Model	Vibrations 1000 vpm 2 bar	6 bar	Force N 2 bar	6 bar	Air consumption l/min 2 bar	6 bar	A Length mm	C SW mm	D Thread	E Inlet	F Outlet	Weight g	Piston-Stroke mm
FAL-8	2,05	3,4	12	42	8	30	91	23	M- 6	M-5	M-5	90	27,0
FAL-18	1,42	2,25	60	205	20	60	117	50	M-10	1/8”	1/8”	675	33,0
FAL-25	1,13	2,02	120	530	40	155	139	65	M-16	1/4”	1/4”	1315	40,0
FAL-35	1,24	2,01	205	655	75	350	140	-	M-16	1/4”	1/4”	2350	37,0
-													
VTL-155	1,8	2,7	40	96	18	85	114	-	M-10	1/8”	1/8”	555	34,0
VTL-165	1,9	2,6	43	96	17	70	111	-	M-10	1/8”	1/8”	1510	35,0
VTL-255	1,6	2,2	80	400	56	180	140	-	M-16	1/4”	1/4”	3220	45,0
VTL-405	1,4	2,0	200	650	80	390	140	-	M-16	1/4”	1/4”	5430	45,0
VTL-555	1,6	2,5	450	1305	140	717	125	-	M-20	3/8”	3/8”	8900	37,7
VTL-855	1,8	2,6	700	1530	301	900	122	-	M-20	3/8”	3/8”	17100	34,7
VTL-1105	2,1	3,0	1550	2740	345	920	122	-	M-20	1/2”	3/8”	25830	32,7

Housing made from hard-anodized aluminium alloy, steel or plastic
Piston made from leaded-bronze or steel
Threaded insert for mounting purposes

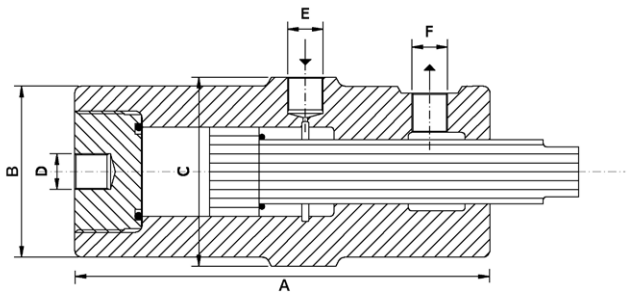

High-frequency Knockers FPK

Properties

- High impact frequency 1'350 – 4'600 vpm
- High force range 195 – 56'350 N
- Lubrication-free
- Can be used up to 120°C, HT version up to 150°C and LT version down to -40 °C on request
- Can be used in dusty environments

Field of application

Broad field of application, for example knocking off adhering material from container walls such as silos, chutes, filter outlets, reactors and pipelines.

Construction

With the FPK-knockers compressed air pushes a piston in a linear direction (vibration).
When used as a high frequency knocker, the piston shoots against a plastic baffle plate supplied with the knocker.
Additional impact regulation is provided by baffle plates of varying hardness.

Technical data

Model	Baffle plate	Frequency vpm			Force (peak) N			Air consumption l/min			Weight
		2 bar	4 bar	6 bar	2bar	4 bar	6 bar	2 bar	4 bar	6 bar	kg
FPK-40	none	2100	2400	2800	195	455	730	93	150	225	
	soft	2800	3900	4600	3920	10410	15030	100	195	360	1,2
	hard	2800	3900	4600	7240	14990	22750	100	195	360	
FPK-55	none	1350	1750	2050	510	1165	1985	162	360	470	
	soft	2200	3400	4300	5430	21310	36570	230	380	500	4,7
	hard	2200	3400	4300	17570	36960	56350	230	380	500	

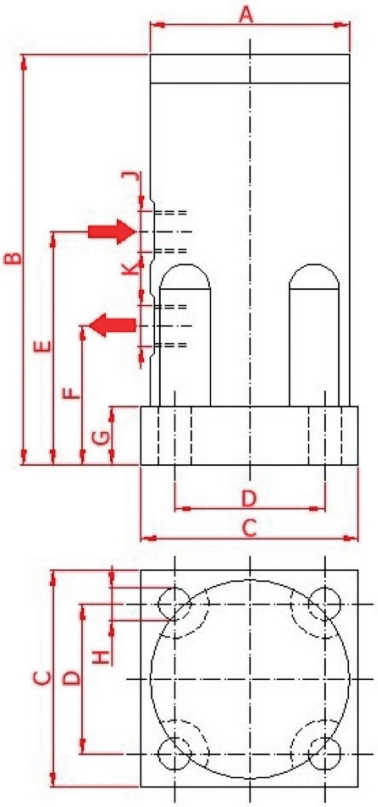

Sizes in mm

Model	A	B	C	D	E	F	G	H	J	K
FPK-40	68	140	74	51	80	48	20	11	1/4"	1/4"
FPK-55	94	191	104	78	111	60	25	13	3/8"	3/8"

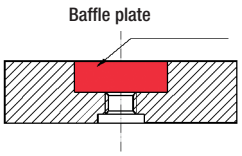

The FPK can be recycled.

Housing:	Aluminium, hard-anodized
Base, lid:	Aluminium, hard-anodized
Piston:	Steel, PTFE-coated
Baffle plate:	Plastic

Knockers ‹FKL in› and ‹FKL si›

Variable impact force and interval.

Properties

- «FKL in»: Single or interval impact mode, «FKL si» only single-impact mode
- «FKL in»: Variable impact force and interval
- «FKL si»: Single impact mode. Impact force can be set pneumatically and interval can be set mechanically
- Lubrication-free
- Flexible range of application
- Can be used up to 85°C, HT version up to 150°C and LT version down to -40°C on request

Field of application

Broad field of application. Knocking off adhering material from container walls such as silos, chutes, filter outlets, reactors and pipelines.

Construction

A piston is forced against a spring by compressed air. With rapid venting, the piston closes against a baffle plate. (Model si: mechanical impact regulation by restricting the piston stroke by means of an insertable threaded rod.) Knocker housing made of aluminium, baffle plate made of impact-resistant special plastic.

Interval impact mode

The impact depends on the interval time which is set by means of a throttle valve.

The force is adjusted by the three control bores 1 - 3.

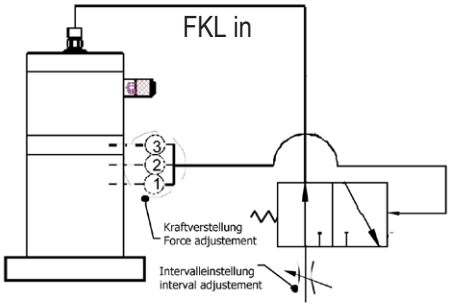

Single impact mode

The impact is triggered immediately after the 3/2-way valve switches. Several knockers can be switched in parallel.

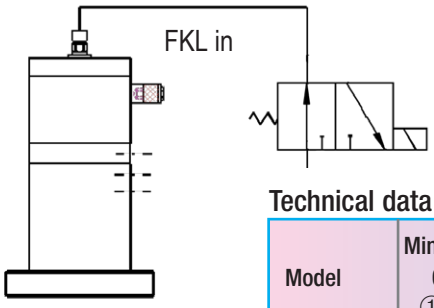

Dimensions

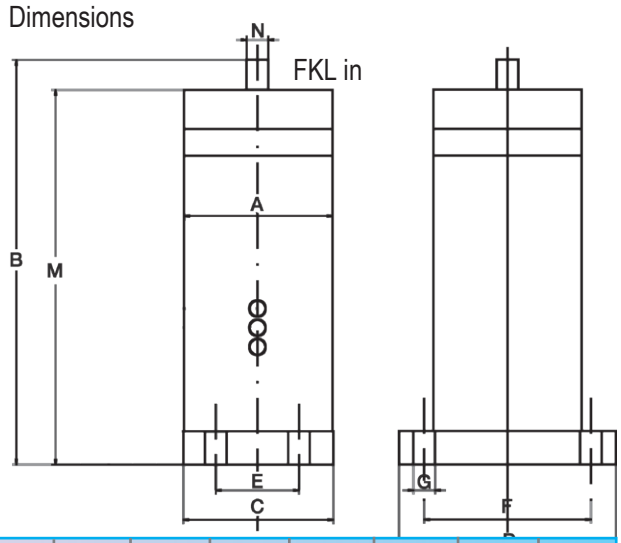

Dimensions in mm

Model	A	B	C	D	E	F	G	M	N
FKL- 25 in	ø 52	170	53	88	-	70	9	153	13
FKL- 50 in	ø 64	194	66	115	-	90	13	177	13
FKL-100 in	ø 89	242	90	130	50	100	13	224	13
FKL-150 in	ø 118	330	-	ø 140	-	ø 115	13	310	13
FKL 200 si	ø 143	410	-	ø 180	-	ø 152	17	-	13

Technical data

Model	Min. op. Pressure (bar) Control bores No ①	②	③	Work/Impact Nm	Impulse/Impact Ns	Stroke vpm	Air consumption l/min	For wall thicknesses up to mm	Weight kg
FKL-25 in	3.0	4.5	6.5	1 - 5	0.5 - 1.0	max. 10	0.07 - 0.2	2	1.03
FKL-50 in	3.0	4.5	6.5	5 - 15	1 - 3.5	max. 10	0.1 - 0.3	3	1.85
FKL-100 in	4.0	5.0	6.5	10 - 50	1 -10.5	max. 10	0.5 - 1.1	5	4.5
FKL-150 in	5.3	6.7	8.0	50 - 140	1 -29.0	max. 10	1.2 - 2.0	8	9.5
FKL-200 si		7.5		100 - 200	1 -57.5	max. 10	2.2 - 3.3	12	14.8

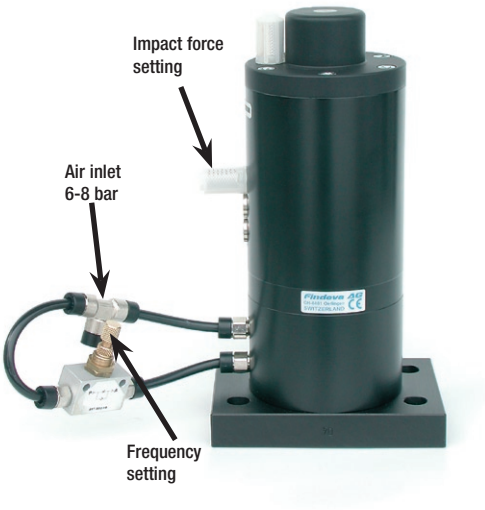

Knockers FKL mi

Automatically controlled. Variable impact force.

(Field of application as for FKL in)

Properties

- Multiple impact mode
- Impact force and interval adjustables
- Lubrication-free
- Can be used up to 85°C
- HT version up to 150°C and LT version down to -40°C on request
- Flexible range of application

Field of application

Broad field of application, also outdoors, wet- and EX-area. Knocking off adhering material from container walls such as silos, chutes, filter outlets, reactors and pipelines.

Construction

A piston is forced against a spring by compressed air. When the impact piston passes the control outlet duct, it is vented suddenly and the piston is shot against a baffle plate made of impact-resistant special plastic. The piston closes off the air duct and the procedure is repeated at the speed set by the throttle.

Technical data (in detail: www.findeva.com)

Model	Pressure bar	Work/ Impact Nm	Impulse/ Impact Ns	Stroke Impacts pm	Air consumption l/min	For wall thicknesses up to mm	Weight kg
FKL 100 mi	6-8	10 - 40	5 - 10	0.5-10	0.5-1.1	5	4.5

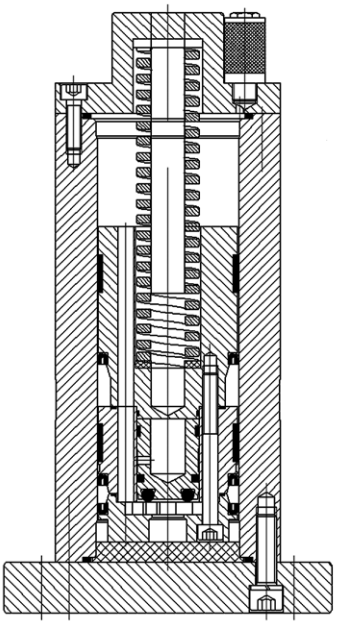

Housing made of hard-anodized aluminium alloy
Steel piston
Baffle plate made of impact-resistant plastic

Linear vibrators Bandwidths and frequencies of the forces

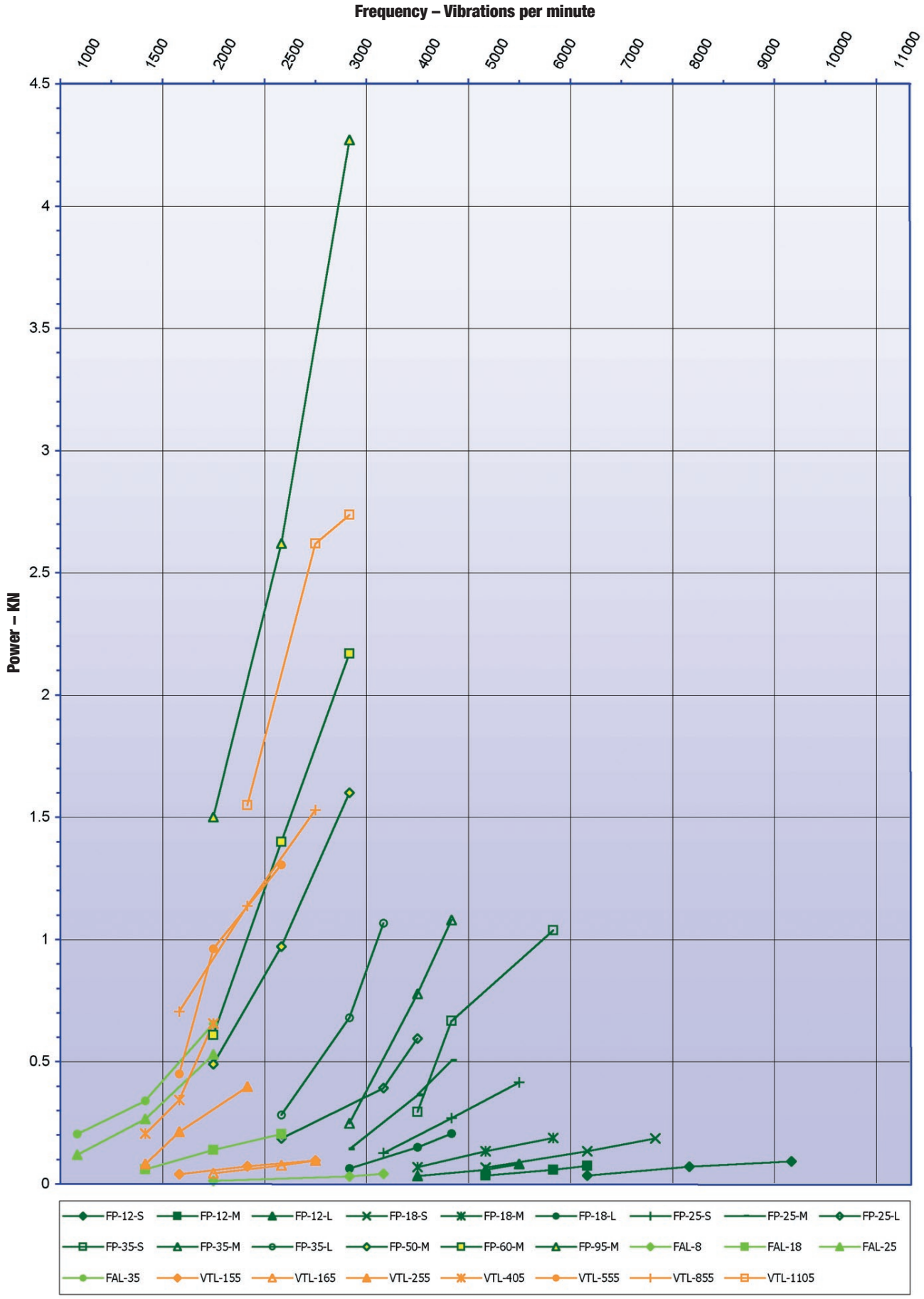

Rotary vibrators Bandwidths and frequencies of the forces

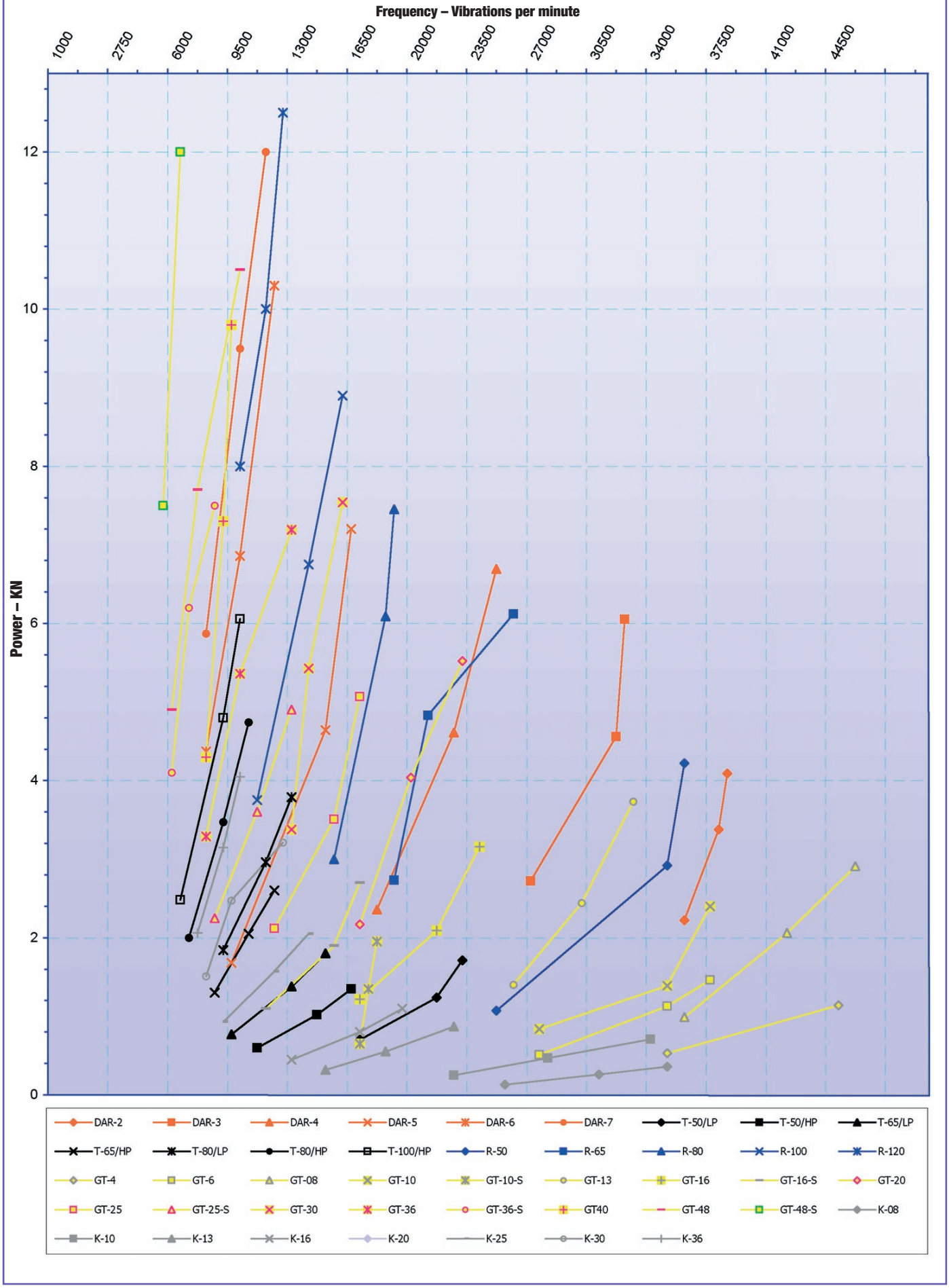

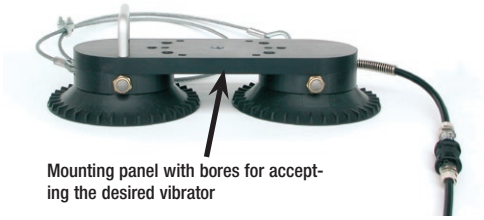
Mounting panel with bores for accepting the desired vibrator

Vacuum Clamps

The flexible solution - attach, vibrate, remove

Properties

- Rapid and flexible solution for temporary placement of the vibrator
- Sturdy and simple construction
- Simple connection, together with a vibrator, to a compressed air supply

Field of application

Any place where short-term vibrating needs to be carried out: on silos, transport containers or pipes. A smooth, neat and not too curved surface improves the grip of vacuum mountings.

Construction

Compressed air operated suckers, single, double (Series D), or triple in a triangular arrangement (Series T) with mounting plate for accepting the vibrator and possibly the compressed-air conditioning device.

Model	Number of suckers	Suitable Vibrators	Minimum ø round vessel
VTC-10	1	DAR-2 • K-8/10 • GT-4/6/8/10 • FP(LF)-12/18 S/M/L • R-50 • T-50 LP/HP VTL-155/165 • FAL-18	100 mm
VTC-15	1	DAR-2/3 • K-8/10/13/16 • GT-4/6/8/10/13/16 • FP(LF)-12/18 S/M/L • R-50/65 T-50/65 LP/HP • VTL-155/165/255 • FAL-18/25	500 mm
VTC-15D	2	DAR-4 • K-20/25/30/36 • GT-20/25/30 • FP(LF)-25/35/ S/M/L • FP(LF)-50 M R-80 • T-80 LP/HP • FAL-25/35 • FKL-100 in/mi	650 mm
VTC-20D	2	DAR-5 • GT-30/36 • FP(LF)-60/-95 M • R-100 • T-100 HP • VFP-50/04	950 mm
VTC 20T	3	VFP 50/10	5000 mm

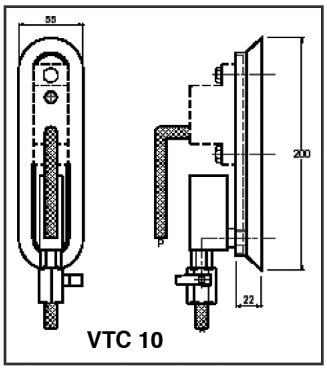

VTC 10

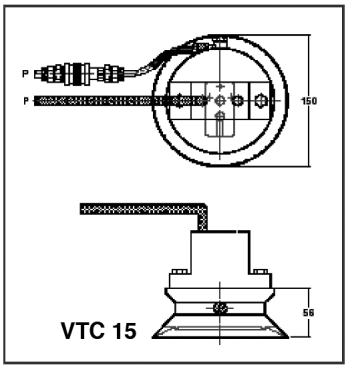

VTC 15

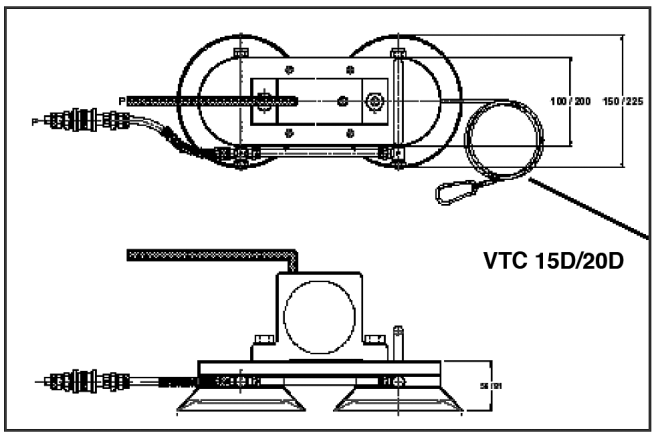

VTC 15D/20D

Evaluation of the right Vibrator

Full details at: www.findeva.com

Functional principles:

- Rotating vibrators for non-directional circular oscillations: Series K, R, DAR, T, GT
- Linear vibrators for linear aligned oscillations: Series FP, FPLF, FAL, VTL
- Interval knockers: Series FKL, FPK

You choose the vibration characteristics:

- Mainly high-frequency oscillations with low amplitude: Series K, R, DAR, T, GT
- Low-frequency oscillations with high amplitude: Series FP, FPLF, FAL, VTL
- Hammer impacts: Series FKL, FPK

For bandwidths and frequencies see pages 16/17

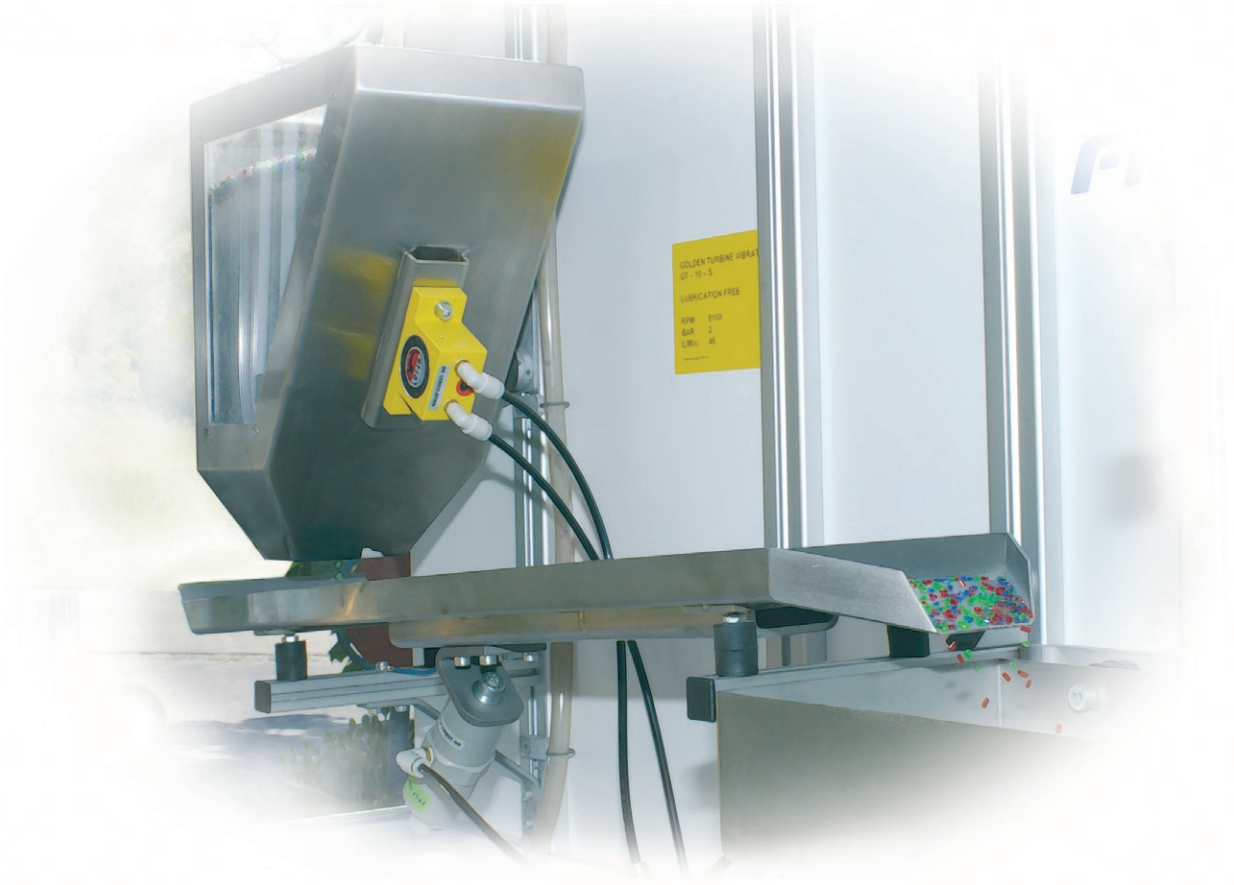

3158